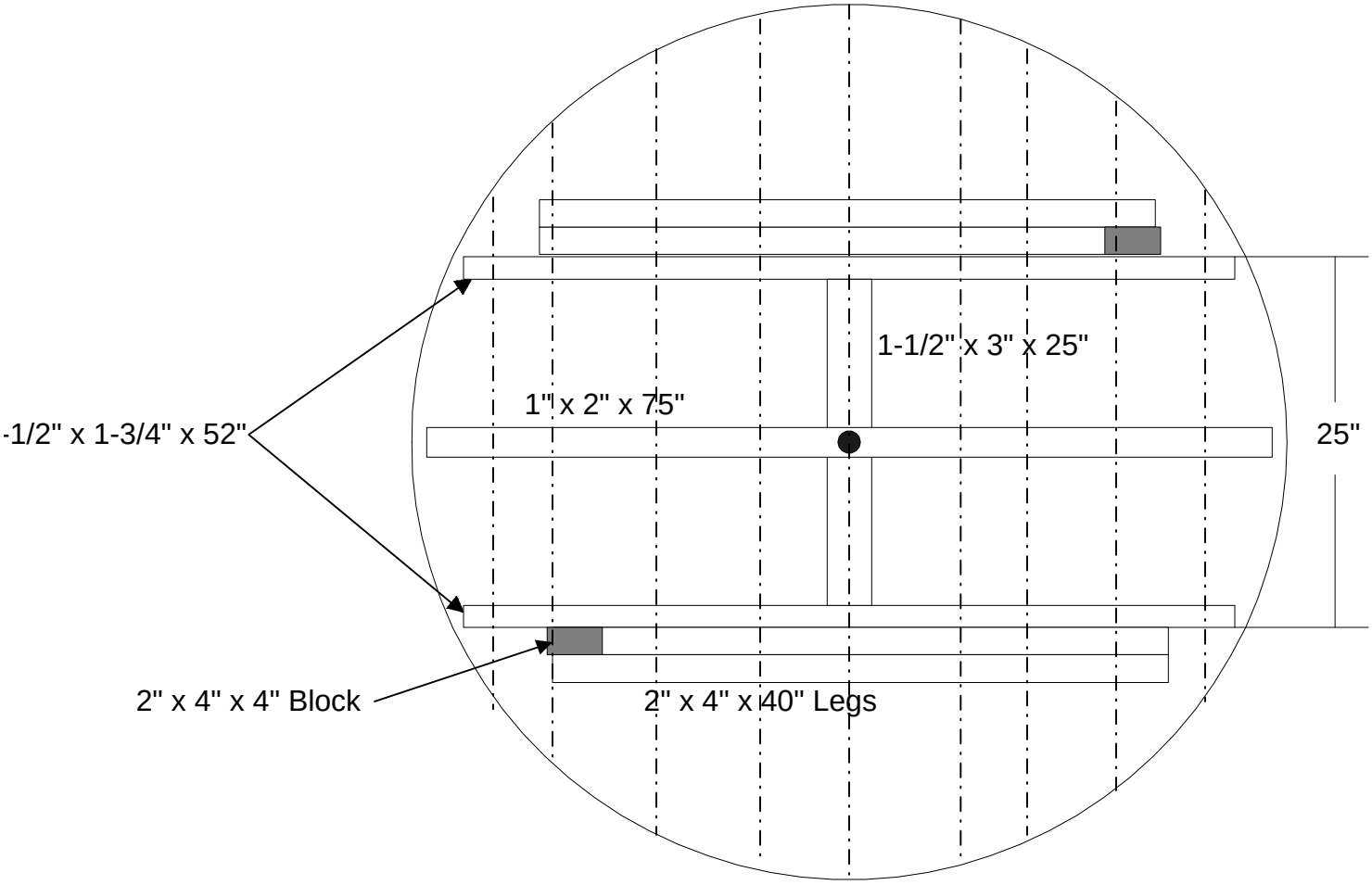

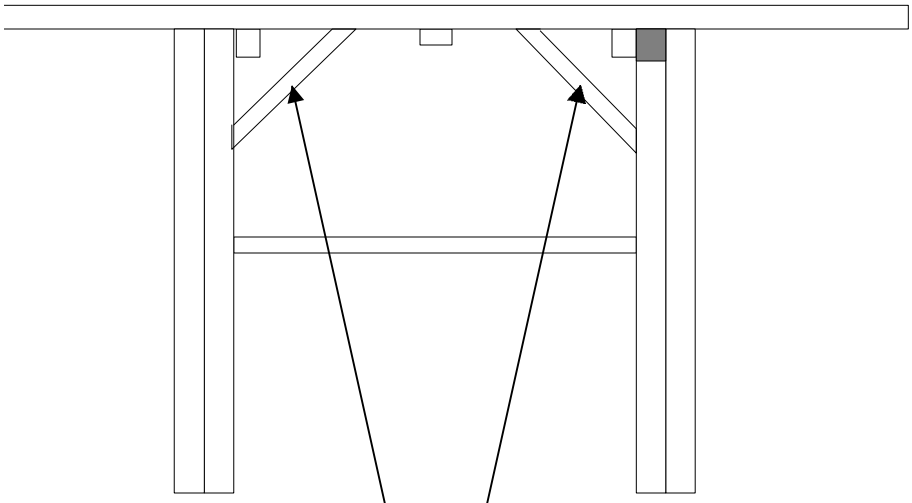

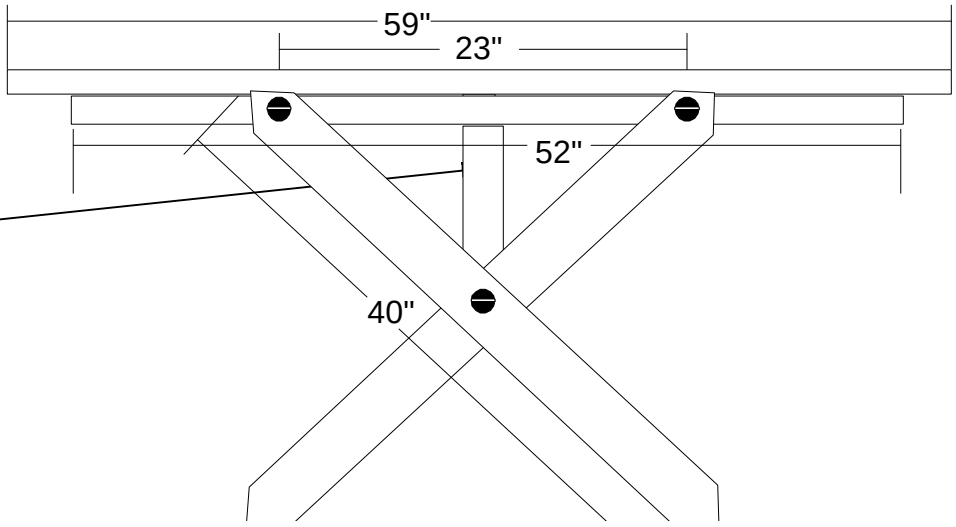

1-1/2" x 3" Supports

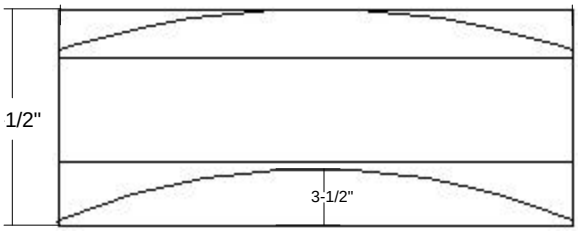
1/2"
3-1/2"

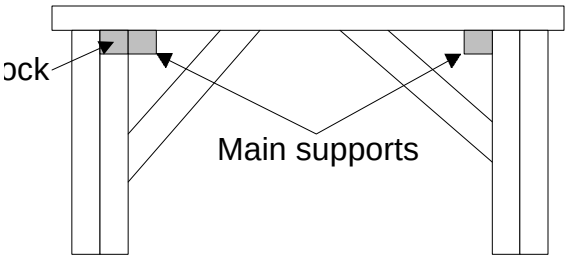
ock
Main supports

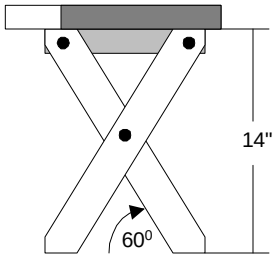
14"
60⁰